# Beamline 6.0.1 (Hard X-ray) EPS dwg.

rev 3 Ken Woolfe 6/1/06

COLOR KEY

- VALVES
- VACUUM GAUGES & PUMPS
- APERTURES, STOPS, DIAGS
- FAST VALVE & SENSORS
- WATER FLOW SWS.
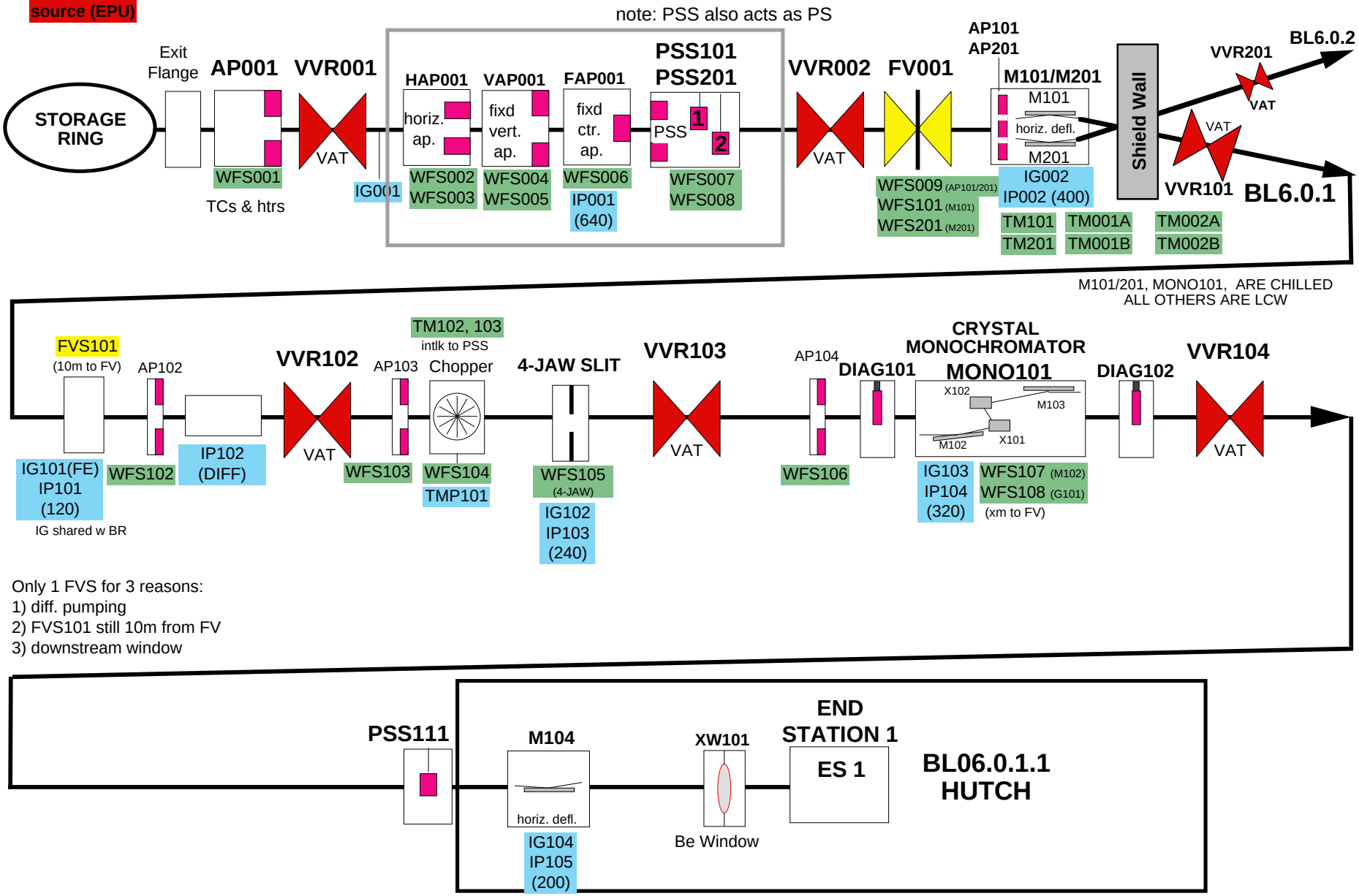
Naming of BR based on source (EPU)